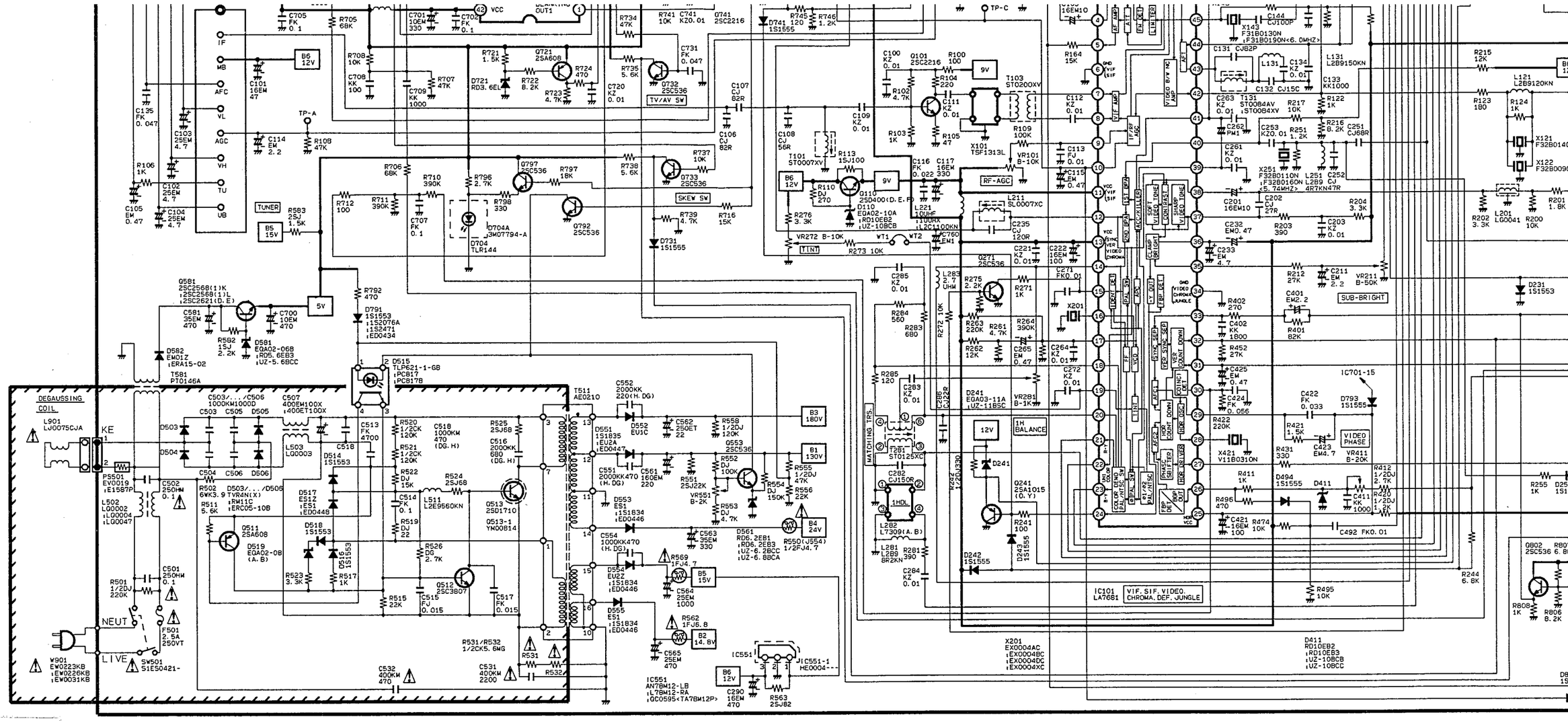

FILE NO. C-2059

ORIGINAL

SM 520122

CIS/East Europe 1/1

THE SERVICE PRECAUTION:
The area enclosed by this line(▲▲▲) is directly connected with AC mains voltage. When servicing the area, connect an isolating transformer between TV receiver and AC line to eliminate hazard of electric shock.

Q511	
	VOLT.
B	10.4V
C	− 1.9V
E	10.8V

Q512		
	VOLT.	WAVEFORM
B	− 1.9V	1.1Vp-p
C	− 1.5V	1.5Vp-p
E	0V	-----

Q513		
	VOLT.	WAVEFORM
B	− 1.5V	5.0Vp-p
C	298V	560Vp-p
E	0V	-----

Q581	
	VOLT.
B	5.7V
C	17.0V
E	5.0V

Q553	
	VOLT.
B	7V
C	36.3V
E	6.5V

Q110	
	VOLT.
B	10V
C	12 V
E	9V

Q101	
	VOLT.
B	1.2V
C	0.4V
E	4.2V

Q124	
	VOLT.
B	2.3V
C	0.01 V
E	5.6V

Q271	
	VOLT.
B	0.01V
C	6.5 V
E	0.01V

Q241		
	Volt.	Waveform
B	4.4V	8.5Vp-p HORIZ.
C	0.7V	— — —
E	5.0V	5.5Vp-p HORIZ.

Q802	
	VOLT.
B	6.3V
C	12 V
E	6V

Q810	
	VOLT.
B	0.01V
C	12.0 V
E	0.06V

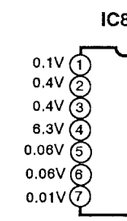

TRANSISTOR, DIODE AND INTEGR

C:COLLECTOR
B:BASE
E:EMITTER

A:ANOD
K:KATH

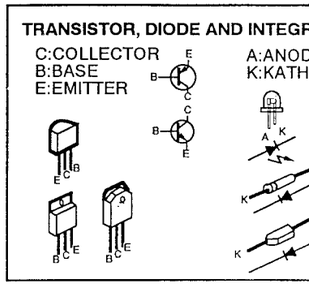

COLOUR TELEVISION

SANYO A3-CA CHASSIS SERIES

SERVICE REF.NO. **CEM2054 - 00**

Part No. 1AA6P2P0367- - E8KR

PRODUCT SAFETY NOTICE:
Product safety should be considered when a component replacement is made in any area of a receiver. Components indicated by a mark ⚠ in this circuit diagram show components whose values have special significance to product safety. It is particularly recommended that only parts specified on the part service manual be used for components replacement pointed out by the mark.

CIRCUIT DIAGRAM NOTICE:

1. All resistance value are in ohms, K=1,000, M=1.000.000.
2. All resistance rated wattages are 1/6W unless otherwise noted.
3. Excepting electrolytic capacitors, all capacitance values of less than 1 are expressed in μ F and more than 1 are pF.
4. All capacitance rated voltages are 50V unless otherwise noted.
5. All inductance values are in μ H.
6. Voltage readings taken with taken with a "VTVM" are from point indicated chassis ground. Voltage readings taken by using a colour bar signal are with all controls at normal position. Some voltages may vary with signal strength.
7. Waveforms were taken with colour bar and controls adjusted for normal picture. Waveforms were taken by using a wide band oscilloscope and a low capacity probe.
8. This circuit diagram covers a basic or representative chassis only. There may be some components or partial circuit differences between the actual chassis and the circuit diagram.

9. Expression of capacitance and resistance in circuit diagram.

Capacitance(Example)
1000 C M 2000 D
- Characteristic
- Capacitance value(220pF)
- Allowable error (± 20%)
- Kind (Ceramic)
- Rated voltage (1.000V)

J= ± 5%
K= ± 10%
M= ± 20%

T,A,U,D: Electrolytic
C,K,B,Ceramic
F:Mylar film
M,N:Polypropylene
Z:Metalized paper

Resistance(Example)
1/2 N J 1.2
- Resistance value(1.2 Ω)
- Allowable error(± 5%)
- Kind(M.carbon)
- Rated wattage(1/2W)

D:Carbon
N:Metaliz carbon
S:Oxide metalized
W:Wire wounding
C:Solid

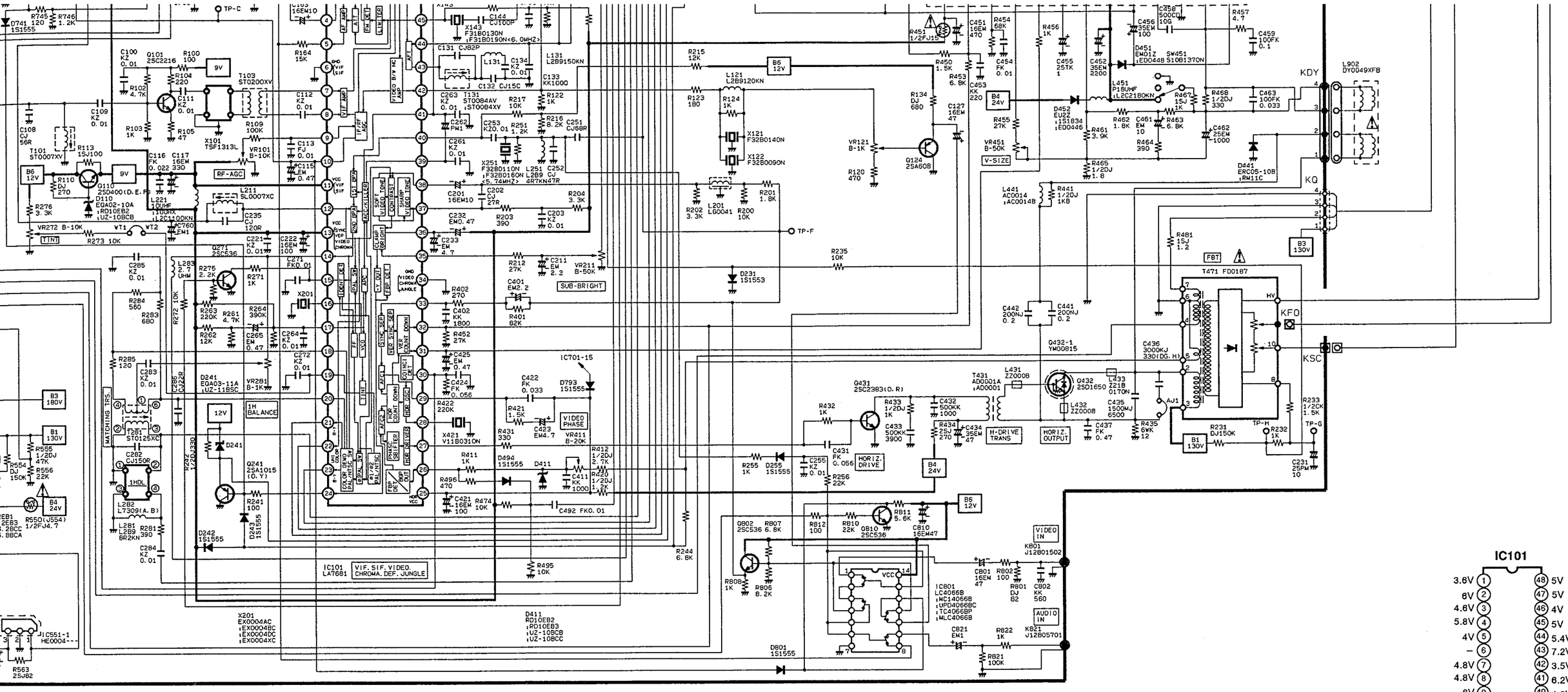

Q110	
	VOLT.
B	10V
C	12 V
E	9V

Q101	
	VOLT.
B	1.2V
C	0.4V
E	4.2V

Q124	
	VOLT.
B	2.3V
C	0.01 V
E	5.6V

Q271	
	VOLT.
B	0.01V
C	6.5 V
E	0.01V

Q241		
	Volt.	Waveform
B	4.4V	8.5Vp-p HORIZ.
C	0.7V	— — —
E	5.0V	5.5Vp-p HORIZ.

Q802	
	VOLT.
B	6.3V
C	12 V
E	6V

Q810	
	VOLT.
B	0.01V
C	12.0 V
E	0.06V

IC801

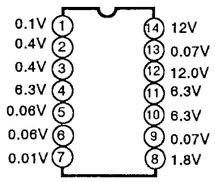

Q431		
	Volt.	WAVEFORM
B	0.09V	2.1Vp-p HORIZ.
C	16.4V	40Vp-p HORIZ.
E	0 V	— — —

Q432		
	Volt.	WAVEFORM
B	2.3V	1.4Vp-p HORIZ.
C	80V	1000Vp-p HORIZ.
E	2.4V	1.2Vp-p HORIZ.

IC451
VRT. DEF.

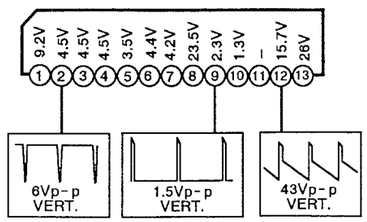

IC101

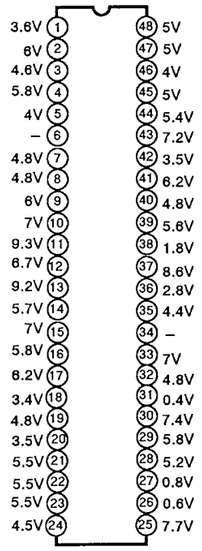

1,000, M=1.000.000.
W unless otherwise noted.
capacitance values of less than 1 are
re pF.
V unless otherwise noted.

ith a "VTVM" are from point indicated
aken by using a colour bar signal are
Some voltages may vary with signal

bar and controls adjusted for normal
using a wide band oscilloscope and a

or representative chassis only. There
circuit differences between the actual

9. Expression of capacitance and resistance in circuit diagram.

Capacitance(Example)

1000 C M 2000 D

- Characteristic
- Capacitance value(220pF)
- Allowable error (± 20%)
- Kind (Ceramic)
- Rated voltage (1.000V)

J= ± 5%
K= ± 10%
M= ± 20%
T,A,U,D: Electrolytic
C,K,B,Ceramic
F:Mylar film
M,N:Polypropylene
Z:Metalized paper

Resistance(Example)

1/2 N J 1.2

- Resistance value(1.2 Ω)
- Allowable error(± 5%)
- Kind(M.carbon)
- Rated wattage(1/2W)

D:Carbon
N:Metaliz carbon
S:Oxide metalized
W:Wire wounding
C:Solid

TRANSISTOR, DIODE AND INTEGRATED CIRCUIT TERMINAL GUIDE

C:COLLECTOR
B:BASE
E:EMITTER

A:ANODE
K:KATHODE

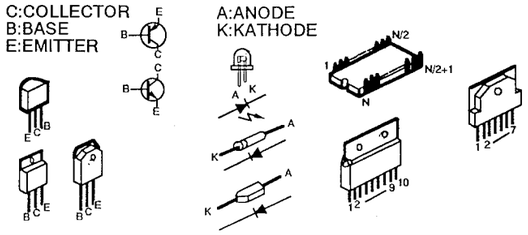

PARTICULAR PARTS SYMBOL

FUSIBLE

NON POLE ELECTRIC CAPACITOR

POSISTER

10. List of replaceable parts

DIODE

R	7DD00019 (SANYO CODE)	1S1555,1S2473 1S2076, DS442 1N4148

NPN. TRANSISTOR

A	7QT00214 (SANYO CODE)	2SC536E/F/G, 2SC945P/Q/R, 2SC1815O/Y/G, 2SC1740Q/R/S, 2SC1740SQ/R/S

PNP. TRANSISTOR

Z	7QT00418 (SANYO CODE)	2SA608E/F, 2SA564AQ/R, 2SA1015O/Y/G, 2SA933Q/R, 2SA933SQ/R

IC701 CPU (Pin Allotment)

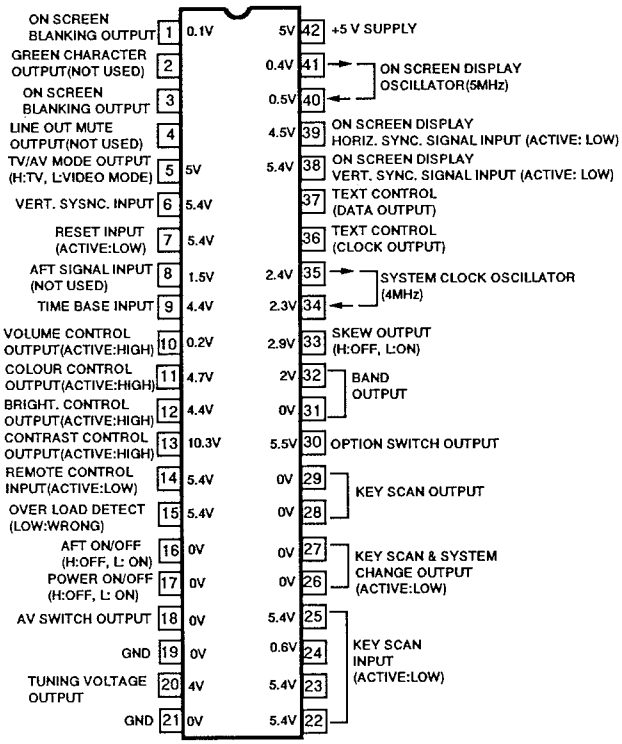

COMPONENT LOCATION

MAIN UNIT

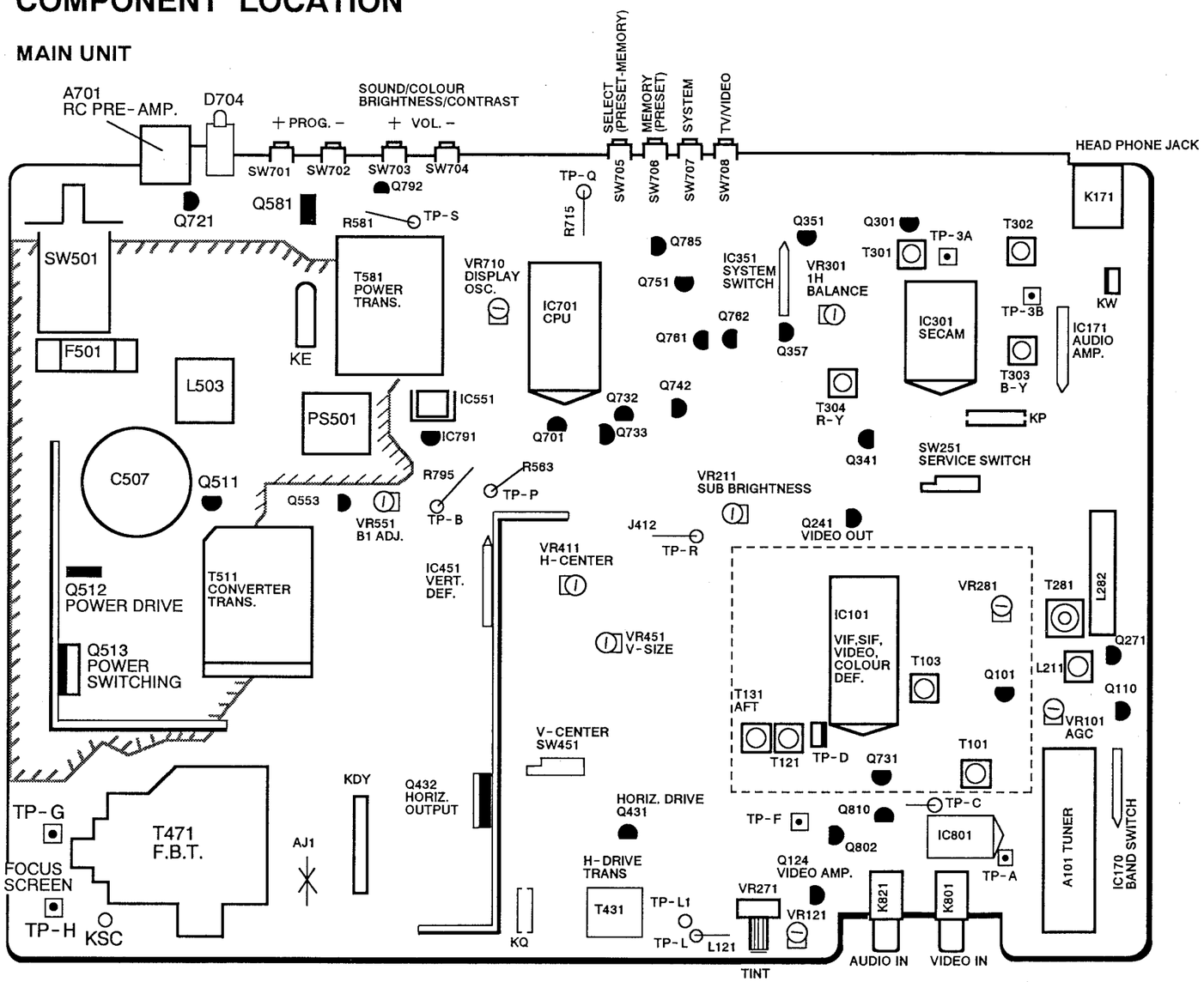

CRT UNIT

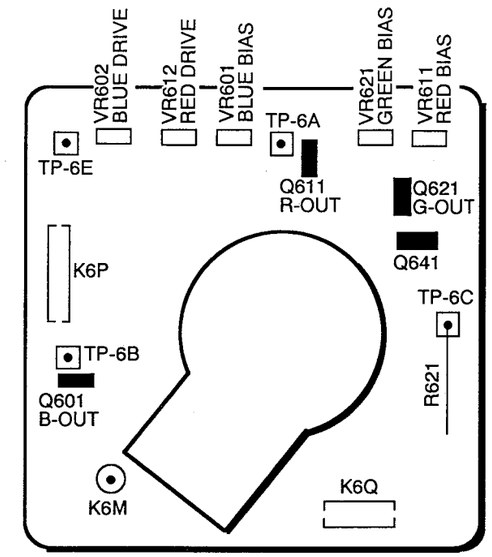

(E2KA)